PUBLIC NOTICE
CITY OF BEXLEY ARCHITECTURAL REVIEW BOARD
BOARD OF ZONING APPEALS

The Bexley Architectural Review Board will hold a Public Meeting on the following case on Thursday, June 09, 2016, at 7:00 P. M., in City Council Chambers, Bexley City Hall, 2242 East Main Street, Bexley, Ohio.

The Board of Zoning Appeals hears requests for Special Permits and Appeals for Variances to the requirements of the Zoning Code, Ordinance No.8-72.

SPECIAL NOTE TO THE APPLICANT: It is important that you or your representative be present at the Public Hearing. It is a rule of the Board to withdraw an application when a representative is not present.

a. Application No.: 16-033
   Applicant: John Ingwersen
   Owner: Joe Chay
   Location: 2738 E. Broad St.
   Request: The applicant is seeking architectural review and approval for a garage addition to the north side of the principal structure. The applicant is also seeking a 20' variance from Bexley Code Section 1252.03 (d) which requires a 26' rear yard setback, to allow the garage addition to be constructed 6' from the (north) rear property line.

A copy of this application is available for review in the Building Department office during the hours of 8:00 A.M. until 4:00 P.M. If you have any questions, please call the Bexley Building Department at 559-4240.

Mailed: 05-26-2016

CITY OF BEXLEY

BOARD OF ZONING APPEALS and ARCHITECTURAL REVIEW APPLICATION

Application Number 2016033

1. **Architectural Review for:**

   X Addition ____Alteration ____New Structure (_____)

   ____Demolition of a Principal Structure ____Demolition of Garage

2. **Variance For:**

   ____Principal Structure ____Garage ____Fence ____ Other

3. **Variance To:**

   ____Front Yard Setback ____Side Yard Setback ____Rear Yard Setback ____ lot coverage

4. Conditional Use For:_____ ____Home Occupation ____ sq.' / height of structure

5. LOCATION 2728 E. BROAD ST Zoning District R6

6. OWNER JOE CHAY Phone #_____ or Cell # 614 327 0700

**** If Applicant is NOT owner, a letter must be submitted giving applicant permission to represent the owner's review request.***

7. Applicant JOHN INGWERSEN E-mail JOHN@CADAFIS.COM Phone #_____ or Cell# 614 361 0447

   Address 1050 BRYDEN /City, State, Zip COLUMBUS, OH 43205

8. Brief Description of Request and/or Variance ADDITION OF ATTACHED GARAGE TO THE NORTH SIDE OF THE RESIDENCE, REAR YARD SETBACK REDUCTION TO 6' (EXISTING NON-CONFORMING) 1252,03D

9. **Valuation of Project $** 22K

- **APPLICATION REVIEW FEES**, (based on valuation of the project):
  $90.00 – up to the first $10,000 valuation. And **$5.00** for each additional $10,000 valuation w/$600 cap.
  (Re-submittal fee **$50.00**)
- **VARIANCE REVIEW FEES:**
  Single Family **$100.00**; Fences or Special Permit **$65.00**; All others **$90.00**
- **SIGNATURE** [signature] **/DATE** 3.14.16

Fee: based on valuation	**$** 100
Fee: based on variance	**$**_____
_____**Other**	**$**_____
TOTAL FEE DUE	**$**_____

****Be advised, if the Board or Staff decides it needs the services of an independent expert (example: architect, landscape architect; planner; civil, environmental or traffic engineer; legal counsel, etc.) to assist it, it shall designate the person to be consulted and the cost of consultation thereof shall be paid by the Applicant in addition to the review filing fees. (Ord. 54-11)**

- **LOT INFORMATION**

Address [illegible] E BROAD ST Zoning District R6

Lot Width 74 ft Depth 130 ft Total Area 12,197 sq ft

Existing Residence (foot print) 2940 sq ft Garage _____ sq ft

Existing Building Height _____ one-story X two-story

Proposed Addition (foot print) 600 sq ft 14 Height X one-story _____ two-story

Proposed Garage 600 sq.ft. 14 Height X one-story ___ two-story

Permitted Lot Coverage _____ % = _____ sq ft

Lot to be covered 49 % = 3540 sq ft

Please submit a **SITE PLAN**, which gives the setback from all existing structures to front, side and rear property lines. Indicate proposed addition or proposed structure and indicate how far it is setback from the front, side and rear property lines. Also include the distance between the principal structure and detached garage.

- **ARCHITECTURAL INFORMATION**

Architect and/or Residential Designer JOHN INGWERSEN

Contractor/Builder _____

Preliminary Review _____ Final Review X

- DESCRIPTION OF CHANGES PROPOSED ADDITION OF A 1 STORY ATTACHED GARAGE

- DESCRIPTION OF ANY EXTENUATING CIRCUMSTANCES TO BE CONSIDERED

_____

Please indicate: the existing materials and the proposed changes of exterior materials to be used in the completion of your design project. Check all that apply in each category below:

- **ROOFING** ☐ **House Only** / ☐ **Garage Only** / ☐ **House & Garage**
  1. Existing Roof Type:
     ___ Slate ___ Clay Tile ___ Wood Shake ___ Standard 3-Tab Asphalt Shingle
     ___ Architectural Dimensional Shingles ___ EPDM (rubber) Roofing ___ Metal
  2. New Shingle Manufacturer: _____
  3. New Roofing Type, Style & Color: EPDM - BLACK FLAT ROOF ON PROPOSED GARAGE

- **WINDOWS**
  1. Existing Window Style:
     ___Casement X Double Hung ___Horizontal Sliding ___Awning
     ___ Fixed ___Exterior Storm ___Other:_____
  2. Existing Window Materials:
     ___Wood X Vinyl ___Vinyl Clad Wood ___Aluminum Clad Wood
     ___Aluminum ___Metal ___ Other:_____
  3. New Window Manufacturer:_____
  4. New Window Style, Material & Color: MATCHING DOUBLE HUNG

- **DOORS**

  Existing Exterior Doors (Accurately indicate door style on exterior elevations of drawings)

  1. Entrance Door Type ___Wood ___Insulated Metal X Fiberglass
     ___Sidelights ___Transom Window
  2. Garage Door Type ___Wood ___Insulated Metal ___Fiberglass
  3. Door Finish ___Stained ___Painted

  Proposed Door Type MAN DOOR / Style PANEL Color WHITE
  O.H. GARAGE METAL PANEL WHITE

- **EXTERIOR WALL FINISHES**

TYPE Existing	Proposed		Manufacture, Style, Color
( )	( )	Natural Stone	
( )	( )	Cultured Stone	
( )	( )	Brick	
( )	( )	Mortar	
( )	( )	Stucco	
( )	( )	Wood Shingle	
( )	( )	Wood Siding	
(X)	(X)	Vinyl Siding	CLAY/PUTTY DOUBLE 4 · TOUCH UP TO MATCH EXISTING
( )	( )	Aluminum Siding	
( )	( )	Other_____	

- **EXTERIOR TRIM**
  1. Existing Door Trim:
     ___Cedar ___Redwood ___Pine X Vinyl
     ___Wood composite ___Aluminum Clad ___Molding
     X Standard lumber Profile ___Other:_____
  2. Existing Window Trim:
     ___Cedar ___Redwood ___Pine X Vinyl
     ___Wood composite ___Aluminum Clad ___Molding
     X Standard lumber Profile ___Other:_____
  3. Proposed NEW Door Trim: MATCH EXISTING
  4. Proposed NEW Window Trim: MATCH EXISTING
  5. Trim: Color(s): WHITE

**** Do the proposed changes affect the overhangs?** NO

- **DECKS**

EXISTING:

1. Existing Decking Materials
   ____Cedar ____Pressure-treated wood ____Wood/Plastic Composite
   ____Other_____

2. Existing Railing Materials
   ____Cedar ____Pressure-treated wood ____Wood/Plastic Composite
   X Other PLASTIC, WHITE

PROPOSED:

3. Proposed Decking Materials
   ____Cedar ____Pressure-treated wood ____Wood/Plastic Composite
   ____Other_____

4. Proposed Railing Materials
5. Existing Railing Materials
   ____Cedar ____Pressure-treated wood ____Wood/Plastic Composite
   X Other PLASTIC, WHITE TO MATCH EXISTING

- - - - - - - - - - - - - - - - - TO BE COMPLETED BY RESIDETIAL DESIGN CONSULTANT - - - - - - - - - - - - - -

Date of Review_____**Approved By**_____

To be reviewed by the BZA on:_____

Conditions / Stipulations:_____

_____

_____

_____

_____

ATTACHED GARAGE ADDITION FOR

CHAY RESIDENCE

2738 E. BROAD STREET
BEXLEY, OHIO 43209

INDEX OF DRAWINGS

CS	COVER SHEET & ELEVATIONS
A1	SITE PLAN, FLOOR PLAN & DETAILS

VICINITY MAP

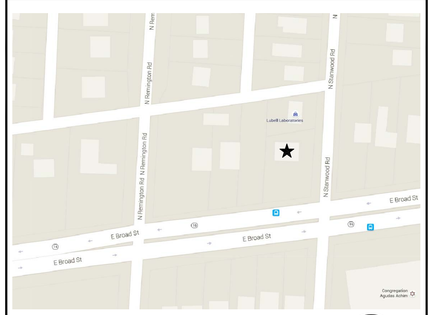

VICINITY MAP IS NOT TO SCALE

CODE REVIEW SUMMARY

BUILDING CODE:	OHIO RESIDENTIAL CODE (OBC) - 2013
MECHANICAL CODE:	OHIO MECHANICAL CODE (OMC) - 2011
PLUMBING CODE:	OHIO PLUMBING CODE (OPC) - 2011
ELECTRICAL CODE:	NATIONAL ELECTRICAL CODE (NEC) - 2011

BUILDING DATA

FOOTPRINT:	492 SQ.FT.
USE GROUP:	SINGLE FAMILY
CONSTRUCTION TYPE:	WOOD FRAME, VINYL SIDIED WITH STONE VENEER
SETBACKS:	AS SHOWN ON SITE PLAN

ZONING DATA

NO CHANGE TO EXISTING BEXLEY ZONING.

STRUCTURAL DATA

GOVERNING CODE: 2011 OHIO BUILDING CODE.

1. ROOF SNOW LOADS
   - A. GROUND SNOW LOAD = 20 psf
   - B. FLAT-ROOF SNOW LOAD = 20 psf
   - C. SNOW EXPOSURE FACTOR = Ce = 1.0
   - D. SNOW LOAD IMPORTANCE FACTOR = 1.0
   - E. THERMAL FACTOR = Ct = 1.0
2. ROOF LIVE LOADS
   - A. MINIMUM ROOF LIVE LOAD = 20 psf.
   - B. DESIGN ROOF LIVE LOAD = 20 psf.
   - C. DESIGN ROOF DEAD LOAD = 20 psf
3. FLOOR LIVE LOADS
   - A. DESIGN FLOOR LIVE LOAD = 100 psf
4. WIND LOADS
   - A. BASIC WIND SPEED (3-SECOND GUST) = 90 mph
   - B. WIND IMPORTANCE FACTOR = 1.00
   - C. BUILDING CATEGORY 2
   - D. WIND EXPOSURE CATEGORY B
   - E. INTERNAL PRESSURE COEFFICIENT = ±0.18
   - F. COMPONENTS AND CLADDING TO BE DESIGNED FOR 35 PSF
5. EARTHQUAKE DESIGN DATA:
   - A. SEISMIC DESIGN CATEGORY B.
   - B. SPECTRAL RESPONSE COEFFICIENT Sds = 0.177
   - C. SPECTRAL RESPONSE COEFFICIENT Sdi = 0.1056
   - D. SITE CLASS = D
   - E. BASIC SEISMIC-FORCE-RESISTING SYSTEM = ORDINARY REINFORCED MASONRY SHEAR WALLS
   - F. DESIGN BASE SHEAR = 5.7 KIPS
   - G. ANALYSIS PROCEDURE: EQUIVALENT LATERAL PROCEDURE
   - H. Ss = 0.166; Si = 0.066
   - I. Cs = 0.089
   - J. R = 2

GENERAL NOTES

1. THESE DOCUMENTS ARE FOR THE ADDITION OF AN ATTACHED GARAGE ON THE NORTH SIDE OF AN EXISTING RESIDENCE. THE USE OF THESE DOCUMENTS IS RESTRICTED TO THE ORIGINAL SITE FOR WHICH THEY WERE PREPARED. REUSE OR REPRODUCTION OF THE DOCUMENTS, WHOLE OR IN PART, FOR ANY OTHER PURPOSE IS PROHIBITED.

2. THE CONTRACTOR AND SUBCONTRACTORS SHALL BE SOLELY RESPONSIBLE FOR COMPLYING WITH ALL FEDERAL, STATE, AND LOCAL SAFETY REQUIREMENTS TOGETHER WITH EXERCISING PRECAUTIONS AT ALL TIMES FOR THE PROTECTION OF PERSONS INCLUDING EMPLOYEES AND PROPERTY. IT IS THE SOLE RESPONSIBILITY OF THE CONTRACTOR AND SUBCONTRACTORS TO INITIATE, MAINTAIN, AND SUPERVISE ALL SAFETY REQUIREMENTS, PRECAUTIONS, AND PROGRAMS IN CONNECTION WITH THE WORK.

3. ALL WORK SHALL COMPLY WITH ANY AND ALL APPLICABLE BUILDING CODES. CONFLICTS BETWEEN THE WORK SET FORTH HEREIN AND ANY CODES, LAWS OR REGULATIONS SHALL BE BROUGHT TO THE ATTENTION OF THE BUILDING OWNER, THE TENANT, AND COLUMBUS CONSULTING GROUP PRIOR TO PROCEEDING.

4. THE GENERAL CONTRACTOR SHALL BE RESPONSIBLE TO COORDINATE ALL WORK, AND FOR THE MEANS, METHODS, PROCEDURES, TECHNIQUES, AND SEQUENCE OF CONSTRUCTION.

5. THE GENERAL CONTRACTOR SHALL PROVIDE ALL REQUIRED PERMITS, FEES, AND INSPECTIONS AS MAY BE REQUIRED BY GOVERNING BODIES HAVING LEGAL JURISDICTION.

6. GENERAL CONTRACTOR IS TO GUARANTEE ALL WORK INCLUDING WORK DONE BY SUBCONTRACTORS FOR A PERIOD OF ONE (1) YEAR COMMENCING WITH THE DATE OF SUBSTANTIAL COMPLETION OF THE WORK.

7. THE GENERAL CONTRACTOR SHALL BE RESPONSIBLE FOR ALL SCHEDULING AND MONITORING OF ON-SITE TESTING AND INSPECTION SERVICES.

8. WHEN CONTRACTOR ACCEPTS DELIVERY OF ALL ITEMS NOTED ON PLANS EITHER IN CONTRACT OR NOT IN CONTRACT HE SHALL BE RESPONSIBLE FOR LOSS AND/OR DAMAGE TO THESE ITEMS.

9. GENERAL CONTRACTOR TO HAVE JOB PHONE ON PREMISES DURING ENTIRE CONSTRUCTION PERIOD.

10. THE GENERAL CONTRACTOR AND EACH SUBCONTRACTOR IS TO HAVE A FULL TIME QUALIFIED SUPERVISOR ON THE SITE AT ALL TIMES WHILE WORK IS BEING PERFORMED.

11. NOT USED

12. THE GENERAL CONTRACTOR IS TO VERIFY ALL DIMENSIONS AND EXISTING FIELD CONDITIONS WITH THE DRAWINGS. IN PARTICULAR: OVERALL WALL DIMENSION, SOIL CONDITIONS, INCOMING UTILITIES, ETC. GENERAL CONTRACTOR IS TO REPORT IMMEDIATELY TO THE ARCHITECT ANY VARIANCES OR FIELD CONDITIONS THAT MAY CAUSE CONSTRUCTION PROBLEMS PRIOR TO COMMENCING WORK.

13. DO NOT SCALE DRAWINGS. WRITTEN DIMENSIONS GOVERN. ALL PARTITION LOCATIONS, ALL DOOR AND OPENING LOCATIONS SHALL BE SHOWN ON FLOOR PLAN. IN CASE OF CONFLICT NOTIFY THE ARCHITECT. FLOOR PLAN BY ARCHITECT SUPERCEDES ALL OTHER PLANS. ALL DIMENSIONS MARKED "CLEAR" SHALL BE MAINTAINED AND SHALL ALLOW FOR THICKNESS OF ALL FINISHES INCLUDING CARPET, PAD, CERAMIC TILE, VCT, SLATWALL, ETC.

14. ALL DIMENSIONS SHOWN ARE TO FACE OF FINISHED WALLS UNLESS OTHERWISE NOTED.

15. ALL DIMENSIONS ON ARCHITECTURAL DRAWINGS LOCATING STRUCTURAL ELEMENTS ARE TO CENTERLINE OF SUCH ELEMENTS UNLESS OTHERWISE NOTED.

16. ALL DIMENSIONS SHOWN ARE NOMINAL DIMENSIONS UNLESS SPECIFICALLY NOTED OTHERWISE.

17. THE CONTRACTOR SHALL MAINTAIN FOR THE ENTIRE DURATION OF THE WORK ALL EXIT, EXIT LIGHTING, FIRE PROTECTION DEVICES, AND ALARMS, IN CONFORMANCE WITH ALL APPLICABLE CODES AND ORDINANCES.

18. ALL SAW CUTTING AND CORING LOCATIONS SHALL BE REVIEWED IN THE FIELD BY THE GENERAL CONTRACTOR PRIOR TO CUTTING/CORING.

19. PROVIDE PORTABLE FIRE EXINGURISHERS WITH U.L. LABEL AND A RATING OF NOT LESS THAN 2-A WITH 75 FT TRAVEL DISTANCE TO ALL POSITIONS OF BUILDING.

20. ALL RATED WALLS, FIRE BLOCKING, FIRE STOPPING AND SMOKE BARRIERS SHALL BE THE RESPONSIBILITY OF THE FRAMING AND DRYWALL CONTRACTOR AND SHALL COMPLY WITH UL LISTED ASSEMBLIES FOR THE REQUIRED RATINGS INCLUDING JOINTS AND INSPECTIONS WHETHER NOTED OR NOT.

21. FIRE BLOCKING AT CONCEALED WALL SPACES: FIRE STOPPING SHALL BE INSTALLED IN CONCEALED SPACES OF STUD WALLS AND PARTITIONS, INCLUDING FURRED OR STUDDED-OFF SPACES OF MASONRY OR CONCRETE WALLS, AND AT THE CEILING AND FLOOR OR ROOF LEVELS PER OBC SECTION 717.2

22. CONNECTIONS BETWEEN HORIZONTAL AND VERTICAL SPACES: FIRE STOPPING SHALL BE INSTALLED AT ALL INTERCONNECTIONS BETWEEN VERTICAL AND HORIZONTAL SPACES SUCH AS OCCUR AT SOFFITS OVER CABINETS, DROP CEILINGS, COVE CEILINGS, AND SIMILAR LOCATIONS PER OBC 717.2.3

23. REQUIRED FLAME SPREAD RATING: INTERIOR FINISH OF WALLS AND CEILINGS SHALL HAVE A FLAME SPREAD RATING NOT GREATER THAN THAT DESIGNATED BY THE CLASS PRESCRIBED FOR THE VARIOUS GROUPS LISTED IN ORC , WHEN TESTED IN ACCORDANCE WITH NFPA 253.

24. ALL EXTERIOR WOOD BLOCKING IS TO BE PRESSURE TREATED PER AWPA C1, C2, AND C9.

25. ALL GLASS UNITS LOCATED IN HAZARDOUS LOCATIONS SHALL COMPLY WITH TEST REQUIREMENTS OF CONSUMER PRODUCT SAFETY COMMISSION 16, CFR PART 1201 FOR HUMAN IMPACT LOADS.

26. ALL ACCESS PANELS SHALL BE 24" X 30" UNLESS OTHERWISE NOTED.

27. FASTENERS (SCREWS, LAG SCREWS, THRU BOLTS) AND CONNECTORS TO BE COMPATIBLE WITH PRESSURE TREATED LUMBER. SELECT PROPER GALVANIZED FASTENERS & CONNECTORS MEETING ASTM -A153 OR ASTM -A653, OR STAINLESS STEEL FASTENERS OF TYPE 304 OR 316 STAINLESS STEEL.

28. FASENERS TO AZEK PRODUCTS OR EQUAL SHALL BE TYPE 304 OR 316 STAINLESS STEEL.

29. PAINT SHALL BE COMPATIBLE WITH THE PARTICULAR SUBSTRATES, WHICH SHALL BE PREPARED PER THE PAINT MANUFACTURER'S STANDARDS TO ACCEPT THAT PAINT.

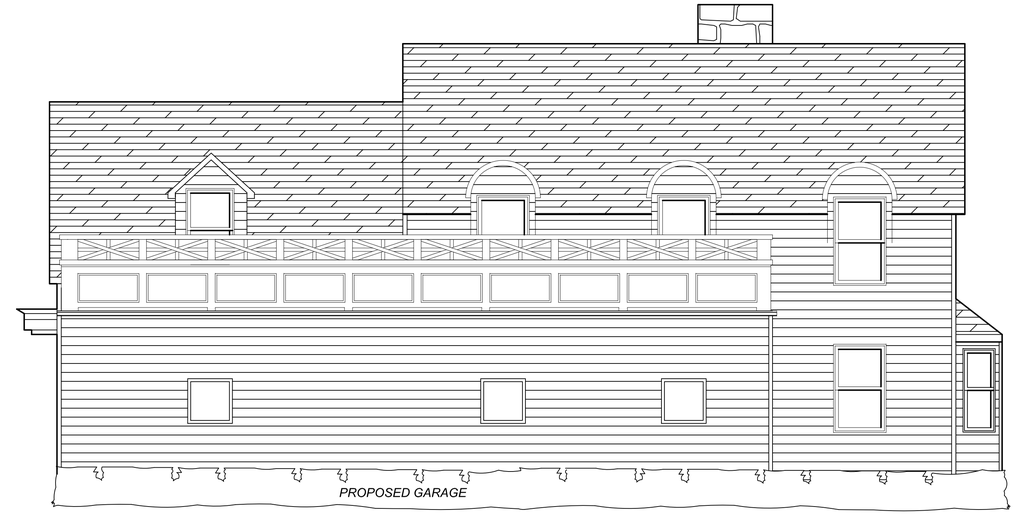

NORTH ELEVATION

WEST ELEVATION

EAST ELEVATION

THESE DRAWINGS AND SPECIFICATIONS PREPARED BY COLUMBUS CONSULTING ARE INSTRUMENTS OF SERVICE FOR USE SOLELY WITH RESPECT TO THIS PROJECT AND, UNLESS OTHERWISE PROVIDED, COLUMBUS CONSULTING SHALL BE DEEMED THE AUTHOR OF DOCUMENTS AND SHALL RETAIN ALL COMMON LAW STATUTORY AND OTHER RESERVED RIGHTS, INCLUDING THE COPYRIGHT. THE ARCHITECTS DRAWINGS, SPECIFICATIONS OR OTHER DOCUMENTS SHALL NOT BE USED BY THE OWNER OR OTHERS ON OTHER PROJECTS, FOR ADDITIONS TO THIS PROJECT OR FOR COMPLETION OF THIS PROJECT BY OTHERS.

ATTACHED GARAGE ADDITION FOR:
CHAY RESIDENCE
2738 E. BROAD ST., BEXLEY, OHIO 43209

CC: COLUMBUS CONSULTING
1050 BRYDEN ROAD, COLUMBUS, OH. 43205 T: 614-361-0447 F: 614-257-1502

ISSUE	REVISION	DATE
PERMIT		03/20/2016

COVER SHEET

CS

16.0772.00

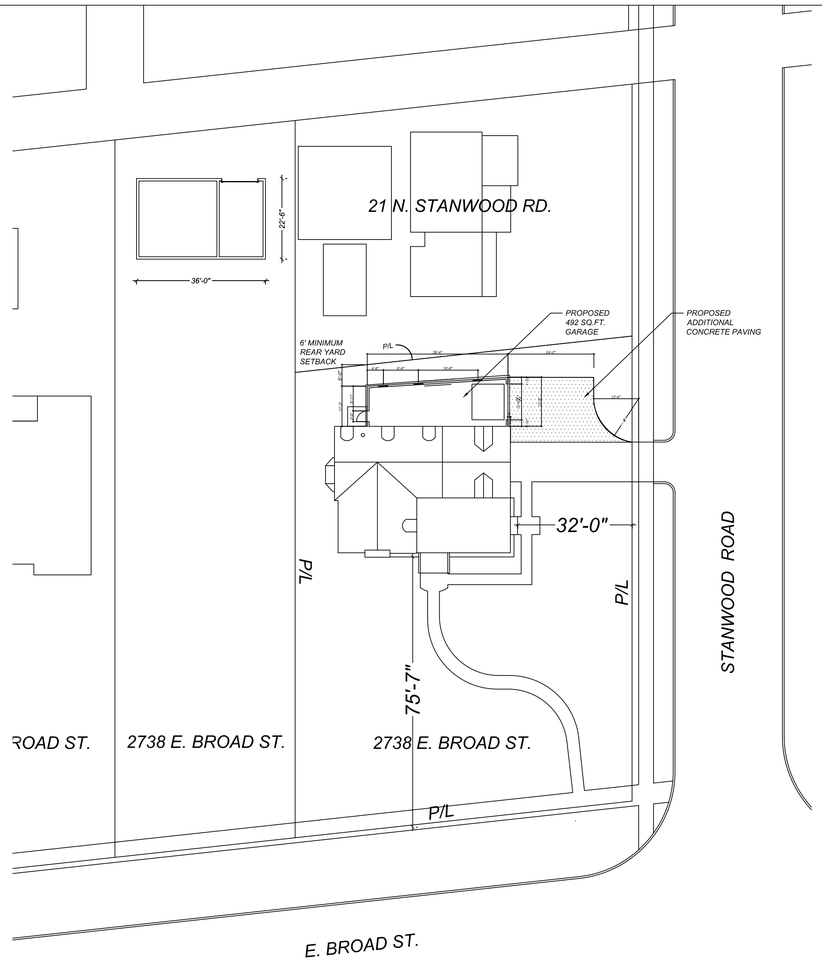

1 **SITE PLAN**
SCALE: 1/20"=1'-0"

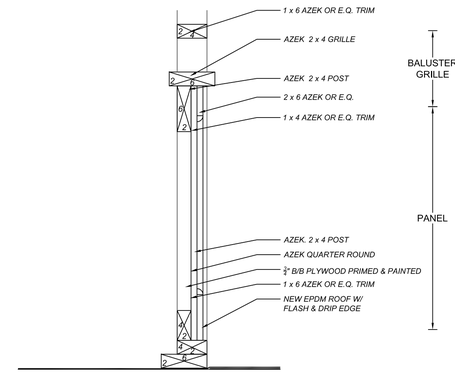

4 A1 **BALUSTER / PANEL / ROOF SECTION**
SCALE: 1"=1'-0"

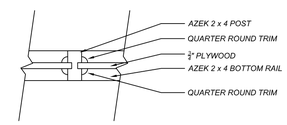

5 A1 **BALUSTER / PANEL DETAIL**
SCALE: 1 1/2"=1'-0"

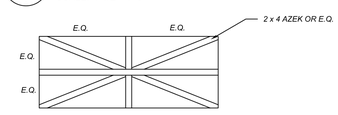

6 A1 **TYP. GRILL DETAIL**
SCALE: 1" = 1'-0"

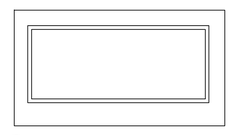

7 A1 **PANEL DETAIL**
SCALE: 1" = 1'-0"

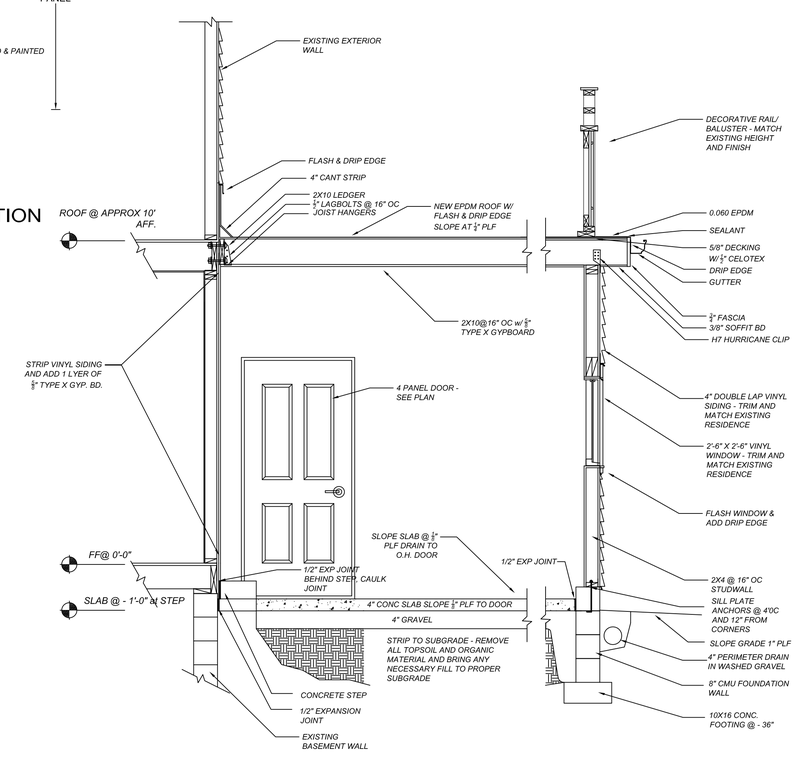

1 A1 **SECTION**
SCALE: 1/2" = 1'-0"

NOTE: FASTENERS (SCREWS, LAG SCREWS, THRU BOLTS) & CONNECTORS TO BE COMPATIBLE w/ PRESSURE TREATED LUMBER. SELECT PROPER GALVANIZED FASTENERS & CONNECTORS MEETING ASTM -A153 OR ASTM -A653 OR STAINLESS STEEL FASTENERS OF TYPE 304 OR 316 STAINLESS STEEL.

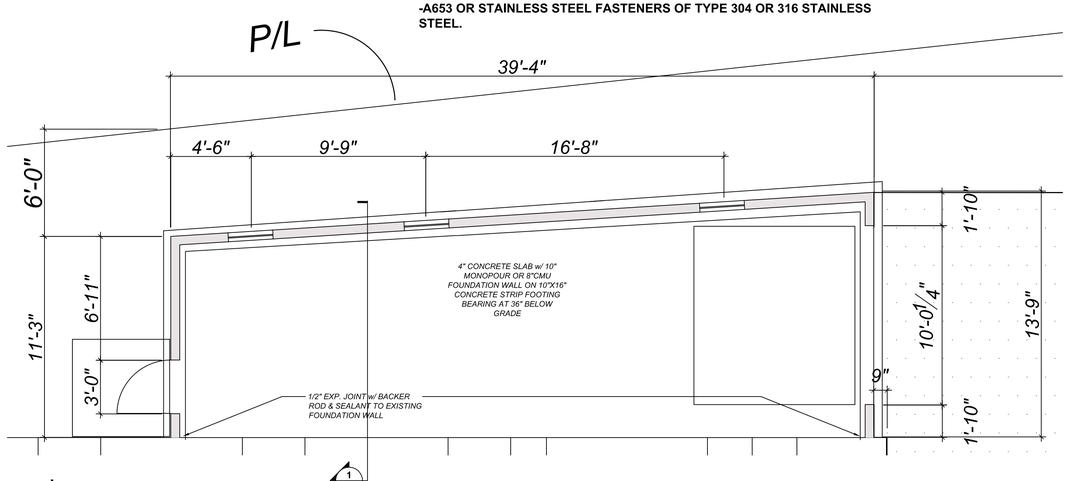

2 **FOUNDATION PLAN**
SCALE: 1/4"=1'-0"

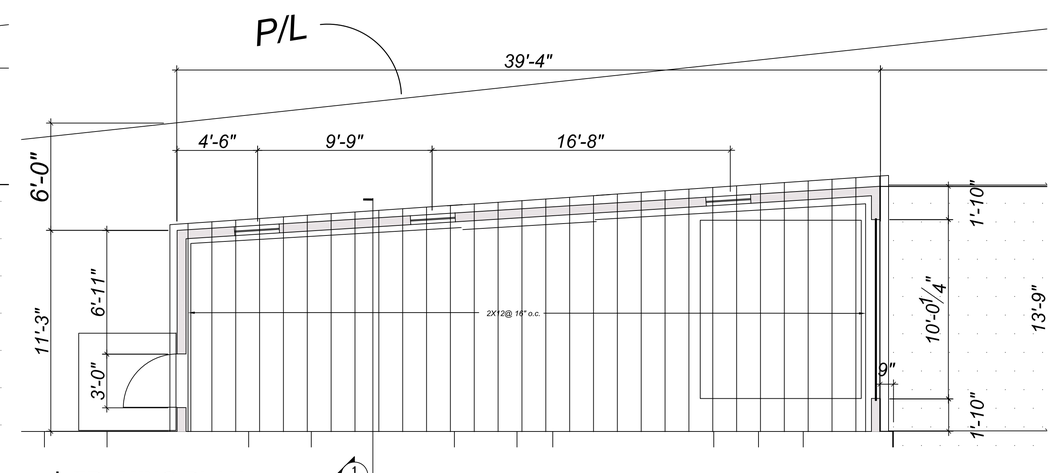

3 **FRAMING PLAN**
SCALE: 1/4"=1'-0"

THESE DRAWINGS AND SPECIFICATIONS PREPARED BY COLUMBUS CONSULTING ARE INSTRUMENTS OF SERVICE FOR USE SOLELY WITH RESPECT TO THIS PROJECT AND, UNLESS OTHERWISE PROVIDED, COLUMBUS CONSULTING SHALL BE DEEMED THE AUTHOR OF DOCUMENTS AND SHALL RETAIN ALL COMMON LAW STATUTORY AND OTHER RESERVED RIGHTS, INCLUDING THE COPYRIGHT. THE ARCHITECTS DRAWINGS, SPECIFICATIONS OR OTHER DOCUMENTS SHALL NOT BE USED BY THE OWNER OR OTHERS ON OTHER PROJECTS, FOR ADDITIONS TO THIS PROJECT OR FOR COMPLETION OF THIS PROJECT BY OTHERS.

ATTACHED GARAGE ADDITION FOR

CHAY RESIDENCE

2738 E. BROAD ST., BEXLEY, OHIO

CC: COLUMBUS CONSULTING
1050 BRYDEN ROAD, COLUMBUS, OH. 43205 T: 614-361-0447 F: 614-257-1502

ISSUE	REVISION	DATE
PERMIT		03/20/2016

FLOOR PLAN

A1

16.0772.00